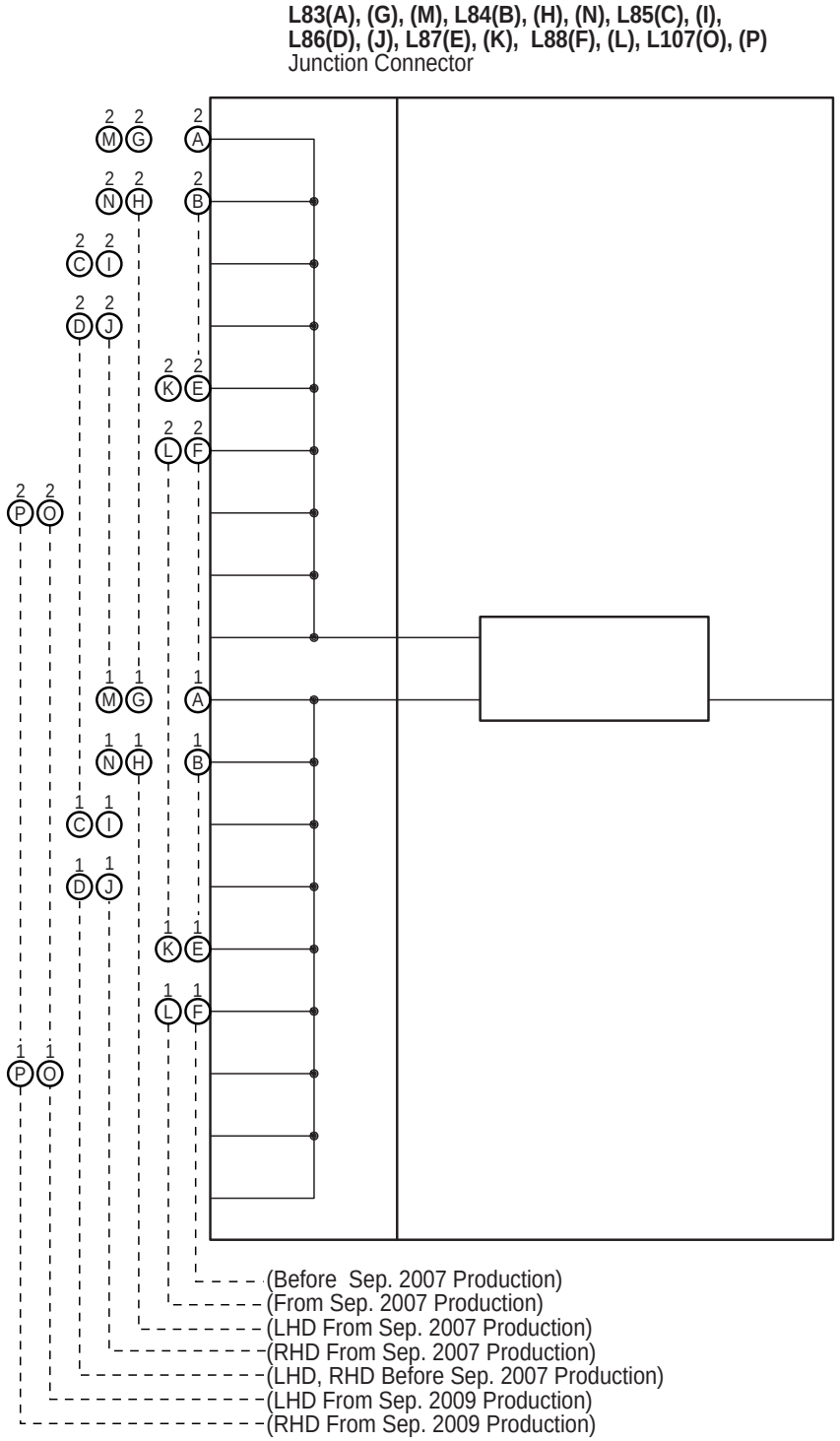[Junction Connector (CAN Center) Inner Circuit]